Pneumatic Toggle Grippers
OG-A 2-Finger

OG-A is a two finger toggle gripper with high gripping force, suitable for heavy industrial applications.

Advantages

- High energy density.
- No need of moving the gripper to approach the workpiece thanks to the 180° jaw opening
- Driving mechanism guided along the entire stroke
- Non-reversible gripping, even without driving air, thanks to the toggle mechanism.
- Adjustment of the opening stroke.
- Special mounting system of the fingers that allows a fine adjustment of the gripping point
- Mounting from two side in two screw directions for universal and flexible gripper assembly.
- Integrated permanent magnets for direct monitoring of piston movement
- Slots for mounting and positioning of magnetic field sensors.
- Air supply via screw connection or hose-free direct connection.

SPECIFICATIONS

Model	Stroke Per Jaw	Air Consumption Per Cycle (Dual Stroke)	Closing Force Per Jaw @ 6 bar	Recommended Workpiece Weight*	Weight	Repeatability	Opening Pressure	Working Temperature	Noise Emission (Sound Pressure)
OG 16-A	90°	5,5 cm³ 0,34 in³	1,4 Nm 12,4 in lb	0,07 Kg 0,15 lb	0,2 Kg 0,44 lb	± 0,05 mm (±0,0020 in)	2 - 8 bar (29 - 116 psi)	5 - 60 °C (41 - 140 °F)	<= 70 db(A) in any direction
OG 20-A	90°	8,3 cm³ 0,51 in³	2 Nm 17,7 in lb	0,10 Kg 0,21 lb	0,24 Kg 0,53 lb	± 0,05 mm (±0,0020 in)	2 - 8 bar (29 - 116 psi)	5 - 60 °C (41 - 140 °F)	<= 70 db(A) in any direction
OG 25-A	90°	18 cm³ 1,10 in³	7 Nm 62,0 in lb	0,33 Kg 0,73 lb	0,46 Kg 1,01 lb	± 0,05 mm (±0,0020 in)	2 - 8 bar (29 - 116 psi)	5 - 60 °C (41 - 140 °F)	<= 70 db(A) in any direction
OG 32-A	90°	38,5 cm³ 2,35 in³	25 Nm 221,3 in lb	1,19 Kg 2,62 lb	0,8 Kg 1,76 lb	± 0,05 mm (±0,0020 in)	2 - 8 bar (29 - 116 psi)	5 - 60 °C (41 - 140 °F)	<= 70 db(A) in any direction
OG 40-A	90°	77 cm³ 4,70 in³	40 Nm 354,0 in lb	1,90 Kg 4,19 lb	1,8 Kg 3,96 lb	± 0,05 mm (±0,0020 in)	2 - 8 bar (29 - 116 psi)	5 - 60 °C (41 - 140 °F)	<= 70 db(A) in any direction
OG 50-A	90°	151 cm³ 9,21 in³	50 Nm 442,5 in lb	2,38 Kg 5,24 lb	3 Kg 6,60 lb	± 0,05 mm (±0,0020 in)	2 - 8 bar (29 - 116 psi)	5 - 60 °C (41 - 140 °F)	<= 70 db(A) in any direction
OG 63-A	90°	288 cm³ 17,57 in³	150 Nm 1327,6 in lb	7,14 Kg 15,71 lb	4,5 Kg 9,90 lb	± 0,05 mm (±0,0020 in)	2 - 8 bar (29 - 116 psi)	5 - 60 °C (41 - 140 °F)	<= 70 db(A) in any direction
OG 80-A	90°	585 cm³ 35,69 in³	225 Nm 1991,4 in lb	10,71 Kg 23,57 lb	8 Kg 17,60 lb	± 0,05 mm (±0,0020 in)	2 - 8 bar (29 - 116 psi)	5 - 60 °C (41 - 140 °F)	<= 70 db(A) in any direction

* Recommended workpiece weight is calculated for force-fit gripping with a static Coefficient of Friction of 0.15 and a Safety Factor of 3 against workpiece slippage.

SECTIONAL DIAGRAM

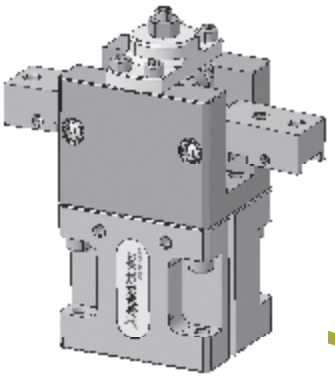

Guidelines for the selection of a gripper model

Selection of the correct gripper model depends on the workpiece's weight, the friction coefficient between the fingers and the workpiece and the required motion of the application.
Due to inertial forces associated with motion, the gripper model should feature a holding force from 10 to 20 times the workpiece's weight.
If the application presents high acceleration/deceleration or impact during the motion, then a further safety margin should be considered.

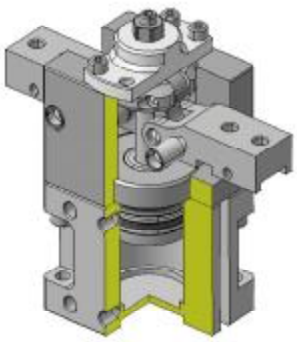

Applied Robotics™
Solutions in reach

PRODUCT INFORMATION

OG-A 2-Finger

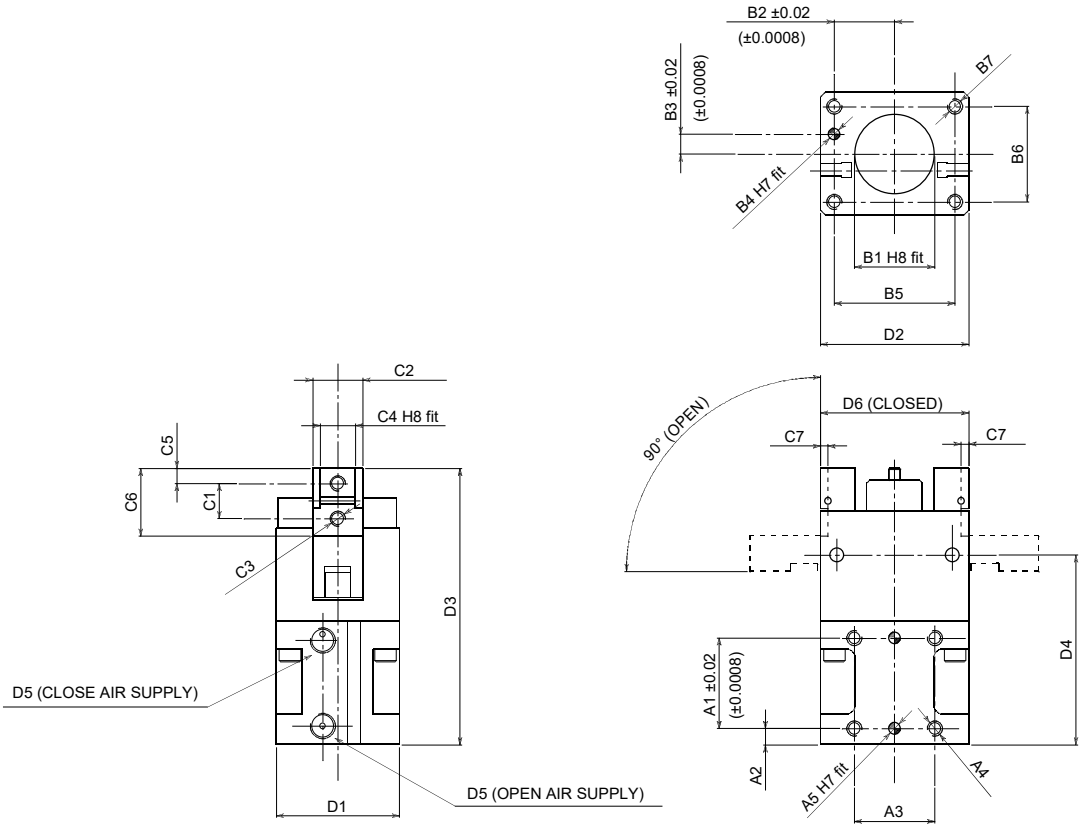

Options

- Mounting brackets for inductive proximity switches
- Magnetic switches

	Mounting - Option # 1					Mounting - Option # 2							Finger Application							Informational Dimensions					
	A1	A2	A3	A4	A5	B1	B2	B3	B4	B5	B6	B7	C1	C2	C3	C4	C5	C6	C7	D1	D2	D3	D4	D5	D6
OG 16-A	28,0 (1,10)	4,5 (0,18)	15 (0,59)	M4	4 (0,16)	16,00 (0,63)	12,5 (0,49)	3 (0,12)	4 (0,16)	25 (0,98)	20 (0,79)	M5	6 (0,24)	15 (0,59)	M3	7 (0,28)	3 (0,12)	13 (0,51)	2 (0,08)	30 (1,18)	34 (1,34)	70 (2,76)	52 (2,05)	M5	34 (1,34)
OG 20-A	28,0 (1,10)	4,5 (0,18)	18 (0,71)	M4	4 (0,16)	20,00 (0,79)	14 (0,55)	4 (0,16)	4 (0,16)	28 (1,10)	22 (0,87)	M5	8 (0,31)	16 (0,63)	M4	8 (0,31)	4 (0,16)	17 (0,67)	3 (0,12)	32 (1,26)	38 (1,50)	75 (2,95)	52 (2,05)	M5	38 (1,50)
OG 25-A	32,0 (1,26)	5,5 (0,22)	20 (0,79)	M5	4 (0,16)	25,00 (0,98)	18 (0,71)	5 (0,20)	5 (0,20)	36 (1,42)	30 (1,18)	M6	10 (0,39)	20 (0,79)	M5	10 (0,39)	5 (0,20)	21 (0,83)	3 (0,12)	41 (1,61)	47 (1,85)	90 (3,54)	62,5 (2,46)	M5	47 (1,85)
OG 32-A	36,0 (1,42)	6,5 (0,26)	32 (1,26)	M6	5 (0,20)	32,00 (1,26)	24 (0,94)	8 (0,31)	5 (0,20)	48 (1,89)	38 (1,50)	M6	14 (0,55)	22 (0,87)	M6	14 (0,55)	6 (0,24)	27 (1,06)	3 (0,12)	49 (1,93)	59 (2,32)	110 (4,33)	75,5 (2,97)	G1/8	59 (2,32)
OG 40-A	43,0 (1,69)	8,5 (0,33)	40 (1,57)	M8	5 (0,20)	40,00 (1,57)	29,5 (1,16)	8 (0,31)	6 (0,24)	59 (2,32)	43 (1,69)	M8	18 (0,71)	36 (1,42)	M8	16 (0,63)	8 (0,31)	35 (1,38)	3,5 (0,14)	57 (2,24)	73 (2,87)	135 (5,31)	91 (3,58)	G1/8	73 (2,87)
OG 50-A	52,0 (2,05)	8,5 (0,33)	50 (1,97)	M8	5 (0,20)	50,00 (1,97)	37,5 (1,48)	12 (0,47)	6 (0,24)	75 (2,95)	54 (2,13)	M8	22 (0,87)	36 (1,42)	M10	20 (0,79)	10 (0,39)	42 (1,65)	5 (0,20)	68 (2,68)	89 (3,50)	160 (6,30)	108 (4,25)	G1/4	89 (3,50)
OG 63-A	57,0 (2,24)	10 (0,39)	60 (2,36)	M10	5 (0,20)	63,00 (2,48)	45,5 (1,79)	15 (0,59)	8 (0,31)	91 (3,58)	67 (2,64)	M8	25 (0,98)	48 (1,89)	M10	25 (0,98)	12 (0,47)	50 (1,97)	5 (0,20)	84 (3,31)	108 (4,25)	190 (7,48)	126 (4,96)	G1/4	108 (4,25)
OG 80-A	70,0 (2,76)	12 (0,47)	80 (3,15)	M10	8 (0,31)	80,00 (3,15)	58 (2,28)	20 (0,79)	8 (0,31)	116 (4,57)	88 (3,46)	M10	30 (1,18)	48 (1,89)	M12	25 (0,98)	14 (0,55)	60 (2,36)	5 (0,20)	106 (4,17)	134 (5,28)	225 (8,86)	150 (5,91)	G1/4	134 (5,28)

* Dimensions are in millimiters (inches).
** All dimensions are descriptive and subject to variation for technical upgrading. We reserve the right to make variations without prior notification

Applied Robotics™
Solutions in reach

APPLIED ROBOTICS
648 Saratoga Road, Glenville, NY 12302 USA
Tel: 518-384-1000 Fax: 518-384-1200
www.appliedrobotics.com